KGV-XD SEMI LUGGED
WITH RISING STEM & HAND WHEEL

KGV-XD SEMI LUGGED
WITH PNEUMATIC ACTUATOR

KGV-XD FULLY LUGGED
WITH BONNET & HAND WHEEL

FEATURES

- No cavity or void in body means no clogging.
- 100% drip tightness, no leakage.
- Full port construction.
- Little or no maintenance required.
- Bi-directional sealing, seals even in reverse flow.
- Stem shroud as standard for O, H & S.
- Modular design for fitting of actuators even whilst in pipeline.
- Provision for switch fitting as standard.
- Adjustable scraper/gland for low torque.

OPTIONS

- Material options as shown on page 2.
- Rising or non-rising stem
- Pneumatic actuator
- Electric actuator
- Oil hydraulic actuator
- Gearbox
- Stem cover for rising stem
- Non-rising stem with hand wheel
- ISO top flange
- VEE port gate
- Key cap
- Chain wheel
- Quick action lever
- Fully bonneted
- High pressure available on request.
- Extenstions

TECHNICAL DATA

Size Range:	DN50 - DN1200
Pressure Classes:	Variable according to size (refer to dimensions table. Option up to 75 bar).
Temperature Range:	-40°C to +90°C (EPDM seat) -30°C to +80°C (NBR seat) -40°C to +150°C (VITON seat)
Drilling Standard:	AS4087 CL16 (others available on request).
Leakage Tests:	According to MS-SP81
Coating:	Internally and externally fusion bonded epoxy coated.

ASSEMBLY CONFIGURATION

	STANDARD	OPTIONAL
OPERATION	Rising stem hand wheel	Non-rising stem hand wheel; Key cap; Double-acting pneumatic actuator; Spring-return pneumatic actuator; Electric actuator; Gearbox; Stem cover for rising stem; Chain wheel; Quick action lever; ISO Top mount
SHROUD	Open shroud	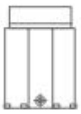 Bonnet
BODY	Semi lugged	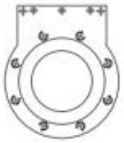 Fully lugged

MATERIAL SPECIFICATIONS & PARTS LIST

NO.	DESCRIPTION	MATERIAL
1	Body	GJL250 Iron (standard) CF8M, ductile iron, duplex (optional)
2	Seat	NBR (standard) PTFE, EPDM, FPM (optional)
3	Gate	SS316 (standard) Duplex (optional)
4	Scraper/ packing	NBR (standard) PTFE, EPDM, FPM (optional)
5	Screw & nut	SS316, A-4
6	Scraper backplate	SS316
7	Shroud	FBE coated steel (standard) SS316 (optional)
8	Stem	SS316
9	Bearing housing	FBE coated steel (standard) SS316 (optional)
9A	Washer	Nylon
9B	Stem nut	Bronze
10	Hand wheel	FBE coated steel
11	Double-acting pneumatic actuator (optional)	Aluminium

Figure 1. Exploded view of KGV-XD semi lugged with open shroud.

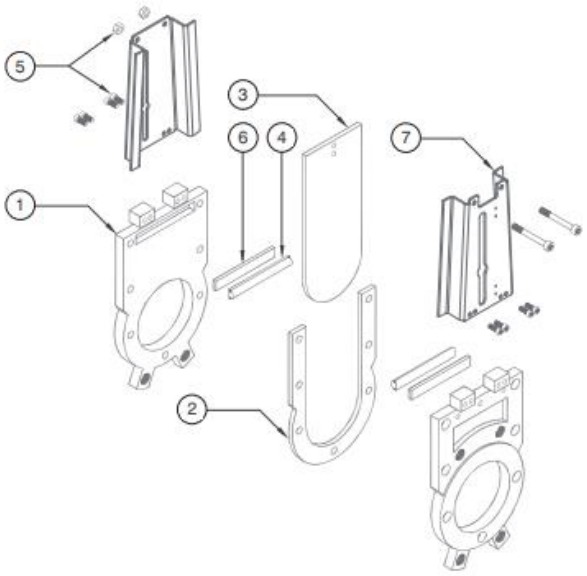

T: 07 3907 0089
F: 07 3890 4232
E: sales@waterequip.com.au

186 New Cleveland Rd Tingalpa Qld 4173
website: www.waterequip.com.au

DIMENSIONAL DRAWINGS

Figure 3. KGV-XD semi lugged with open shroud, rising stem & hand wheel.

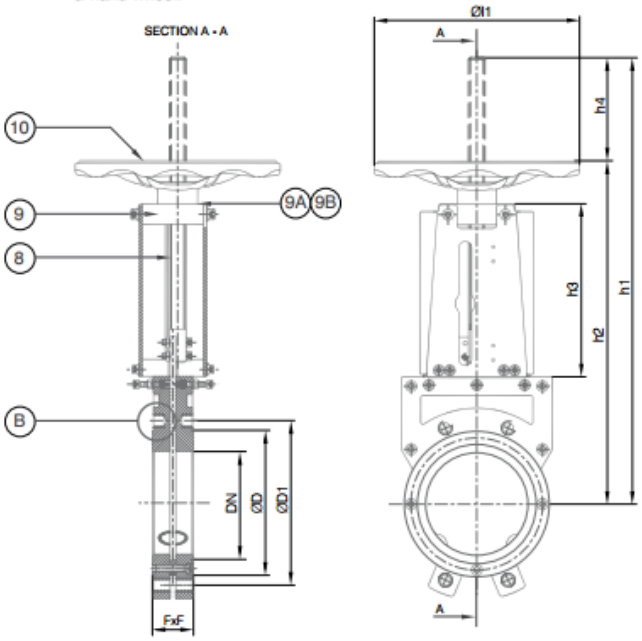

Figure 4. KGV-XD fully lugged with open shroud, & double-acting pneumatic actuator.

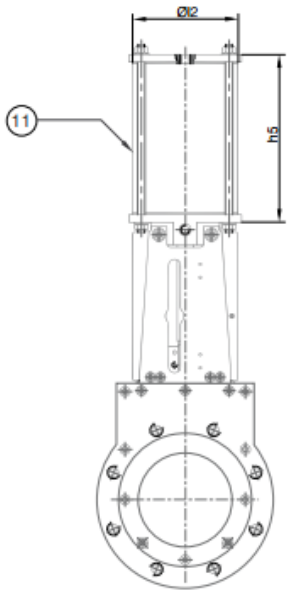

DIMENSIONS (MM)

KGV-XD DN50 - DN1200

DN	FxF	h1	h2	h3	h4	Øl1	ØD	ØD1	Full-Port KV Factor (m³/hr)	V-Port KV Factor (m³/hr)	Min. Torque (N.m)	Max. Torque (N.m)	Stroke	Thread Pitch	Weight (kg)	Max. Working Pressure (bar)	h5	Øl2	Volume (lts)
50	43	335	267	124	68	175	100	114	99	61	8	16	60	18 x 4	6	10	147	80	0.35
65	46	376	293	140	83	175	120	127	168	102	10	17	75	18 x 4	7	10	160	80	0.43
80	46	419	334	161	85	225	135	146	254	155	12	19	90	20 x 4	12	10	177	100	0.72
100	52	476	371	184	105	225	158	178	396	242	15	22	110	20 x 4	14	10	197	100	0.97
125	56	541	411	213	130	225	188	210	619	377	17	24	135	20 x 4	18	10	232	125	1.87
150	56	651	500	257	151	300	212	235	891	543	25	48	160	24 x 5	25	10	267	160	3.48
200	60	803	602	309	201	300	268	292	1584	965	27	50	210	24 x 5	41	8	327	190	6.44
225	68	954	703	359	251	300	320	324	2474	1507	50	69	260	24 x 5	55	7	375	190	7.85
250	68	954	703	359	251	300	320	356	2474	1507	50	69	260	24 x 5	55	7	375	190	7.85
300	78	1137	835	426	302	400	370	406	3563	2170	63	84	310	28 x 5	79	7	428	190	9.25
350	78	1273	921	462	352	400	430	470	4850	2954	78	102	360	28 x 5	107	6	499	250	18.61
375	90	1433	1031	514	402	400	482	495	6334	3858	90	110	410	28 x 5	140	6	549	250	21.25
400	90	1433	1031	514	402	400	482	521	6334	3858	90	110	410	28 x 5	140	6	549	250	21.25
450	90	1604	1161	564	443	500	532	584	8016	4482	215	259	460	40 x 7	240	4	590	300	34.07
500	95	1779	1271	624	508	500	585	641	9897	6027	223	320	510	40 x 7	260	4	656	300	37.78
600	105	2066	1458	725	608	500	685	756	14251	8679	249	388	610	40 x 7	340	4	757	300	44.75
700	110	2528	1735	878	793	500	800	845	19397	11773	330	436	710	50 x 8	575	3	845	300	49.83
750	110	2665	1862	935	803	500	857	927	22277	13567	395	500	760	50 x 8	730	2	975	350	72.92
800	110	2911	2058	1083	853	500	915	984	25334	15429	420	570	810	50 x 8	750	2	1025	350	78.41
900	110	3179	2222	1104	957	600	1004	1092	32064	19527	512	783	910	50 x 8	925	1.5	1128	350	87.55
1000	125	3534	2477	1257	1057	600	1118	1175	39585	24107	620	987	1010	60 x 9	1195	1	1228	350	97.17
1200	125	4128	2871	1422	1257	600	1330	1410	57030	34731	950	1460	1210	60 x 9	1450	1	—	—	—

Note: DN375 only available in fully lugged.
Gearbox is attached to DN700 onwards.

FLANGE DRILLING (MM)

AS4087 CL16 (AS2129 TABLE D)				
	SEMI LUGGED & FULLY LUGGED	SEMI LUGGED		FULLY LUGGED
DN	l3	No. of threaded holes on valve body (n-Ød1)	No. of thru bolts	n-Ød1
50	9	4-M16	—	4-M16
65	9	4-M16	—	4-M16
80	13	4-M16	—	4-M16
100	13	4-M16	4	4-M16
125	13	4-M16	4	8-M16
150	12	4-M16	4	8-M16
200	12	4-M16	4	8-M16
225	16	*DN225 only available in fully lugged		8-M16
250	16	4-M20	4	8-M20
300	16	6-M20	6	12-M20
350	20	8-M24	4	12-M24
375	24	*DN375 only available in fully lugged		12-M24
400	24	6-M24	6	12-M24
450	24	6-M24	6	12-M24
500	25	8-M24	8	16-M24
600	29	10-M27	6	16-M27
700	34	12-M27	8	20-M27
750	29	14-M30	6	20-M30
800	30	12-M33	8	20-M33
900	38	14-M33	10	24-M33
1000	38	18-M33	8	24-M33
1200	38	20-M33	12	32-M33

Figure 6. Bolting Arrangements.

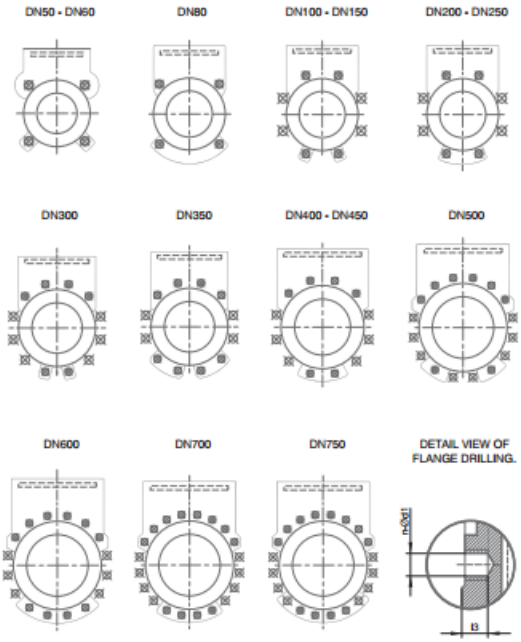

ORDERING GUIDE

SERIES	STEM	MATERIAL	BODY TYPE	SHROUD	OPERATIONS	FLANGE	SEAT
Example: XD	*F*	*11*	*L*	*1*	*H*	*D*	*N*
XD	F. Non-rising	11. Cast iron	L. Lugged	1. Open shroud	H. Hand wheel	D. AS4087 CL16 (AS2129 T/D)	N. NBR
	V. Rising	14. Stainless steel & carbon steel	W. Semi lugged	2. Bonnet	K. Key cap	E. AS2129 (T/E)	E. EPDM
		17. Stainless steel			N. Double-acting Pneumatic actuator	A. ANSI150	V. Viton
					S. Spring-return Pneumatic actuator		P. PTFE
					E. Electric actuator		
					G. Gearbox		
					T. Hand wheel with rising stem cover		
					C. Chain wheel		
					L. Quick action lever		

T: 07 3907 0089
F: 07 3890 4232
E: sales@waterequip.com.au

186 New Cleveland Rd Tingalpa Qld 4173
website: www.waterequip.com.au